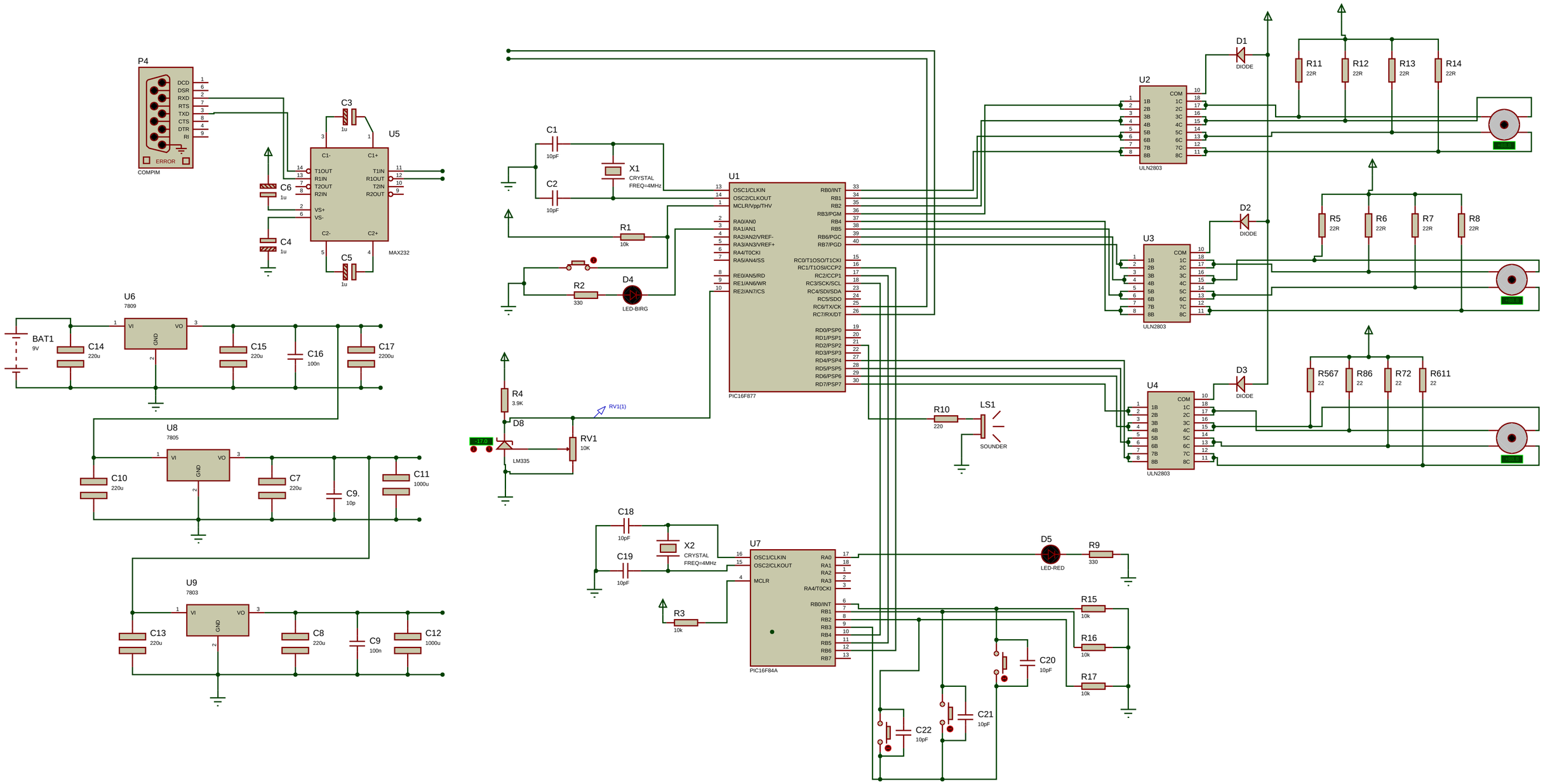
P4
DCD
DSR
RXD
RTS
TXD
CTS
DTR
RI
ERROR
COMPIM
C3
1u
U5
C1-
C1+
T1OUT
R1IN
T2OUT
R2IN
T1IN
R1OUT
T2IN
R2OUT
VS+
VS-
C2-
C2+
C6
1u
C4
1u
C5
1u
MAX232
U6
7809
BAT1
9V
C14
220u
VI
VO
GND
C15
220u
C16
100n
C17
2200u
U8
7805
C10
220u
C7
220u
C9.
10p
C11
1000u
U9
7803
C13
220u
C8
220u
C9
100n
C12
1000u
C1
10pF
C2
10pF
X1
CRYSTAL
FREQ=4MHz
U1
OSC1/CLKIN
OSC2/CLKOUT
MCLR/Vpp/THV
RA0/AN0
RA1/AN1
RA2/AN2/VREF-
RA3/AN3/VREF+
RA4/T0CKI
RA5/AN4/SS
RE0/AN5/RD
RE1/AN6/WR
RE2/AN7/CS
RB0/INT
RB1
RB2
RB3/PGM
RB4
RB5
RB6/PGC
RB7/PGD
RC0/T1OSO/T1CKI
RC1/T1OSI/CCP2
RC2/CCP1
RC3/SCK/SCL
RC4/SDI/SDA
RC5/SDO
RC6/TX/CK
RC7/RX/DT
RD0/PSP0
RD1/PSP1
RD2/PSP2
RD3/PSP3
RD4/PSP4
RD5/PSP5
RD6/PSP6
RD7/PSP7
PIC16F877
R1
10k
R2
330
D4
LED-BIRG
R4
3.9K
D8
LM335
RV1(1)
RV1
10K
R10
220
LS1
SOUNDER
U2
ULN2803
U3
ULN2803
U4
ULN2803
COM
1B
2B
3B
4B
5B
6B
7B
8B
1C
2C
3C
4C
5C
6C
7C
8C
D1
DIODE
D2
DIODE
D3
DIODE
R11
22R
R12
22R
R13
22R
R14
22R
R5
22R
R6
22R
R7
22R
R8
22R
R567
22
R86
22
R72
22
R611
22
C18
10pF
C19
10pF
X2
CRYSTAL
FREQ=4MHz
U7
OSC1/CLKIN
OSC2/CLKOUT
MCLR
RA0
RA1
RA2
RA3
RA4/T0CKI
RB0/INT
RB1
RB2
RB3
RB4
RB5
RB6
RB7
PIC16F84A
R3
10k
D5
LED-RED
R9
330
R15
10k
R16
10k
R17
10k
C20
10pF
C21
10pF
C22
10pF